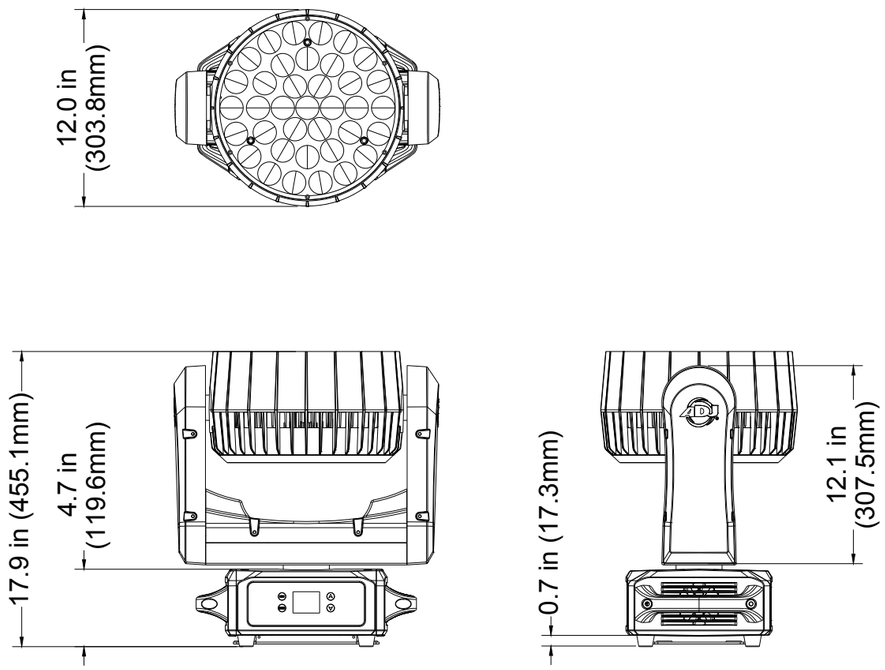


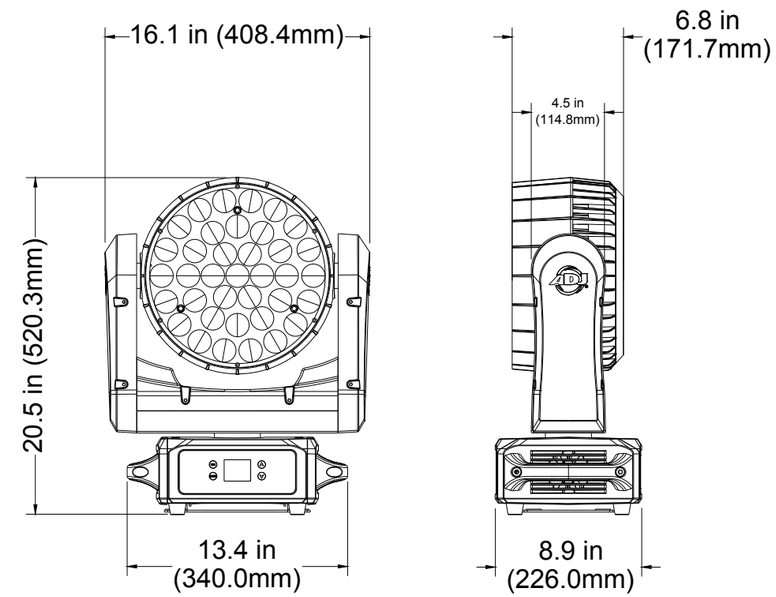


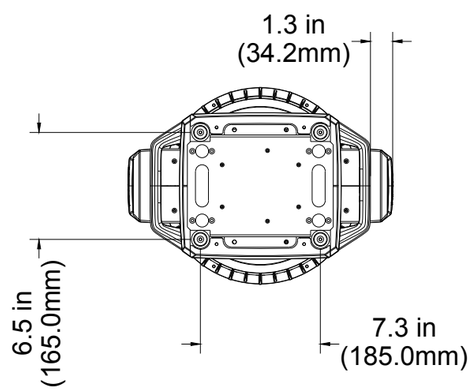


| TITLE: | | | | DATE: |
|---|---|---|---|---|
| ADJ VIZI WASH Z37 | | | | 28-APR-2021 |
| SCALE: | TOL: | .XX(.X) | .XXX(.XX) | ANGLE: |
| NONE | ± | - | - | - |