ADJ PIXIE STRIP 120

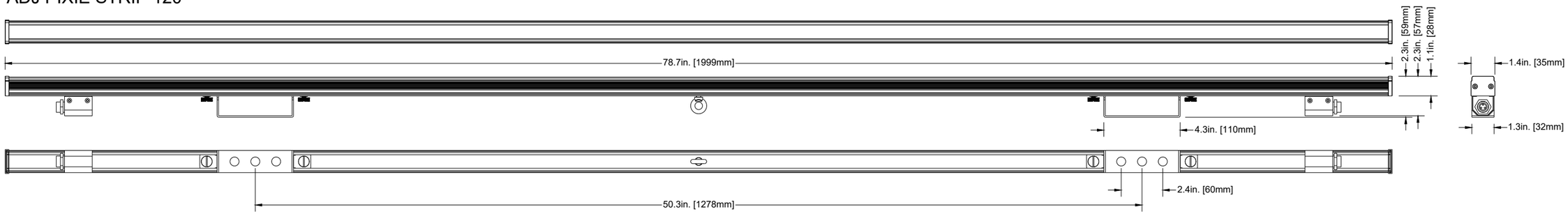

ADJ PIXIE STRIP 60

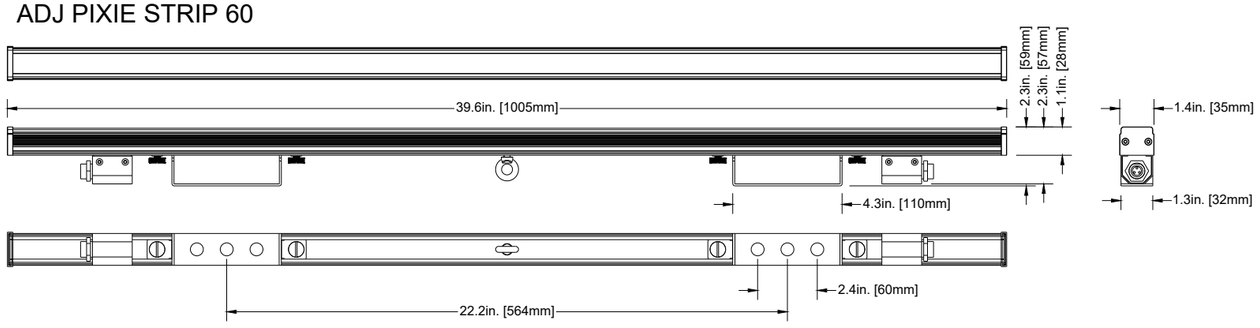

ADJ PIXIE STRIP 30

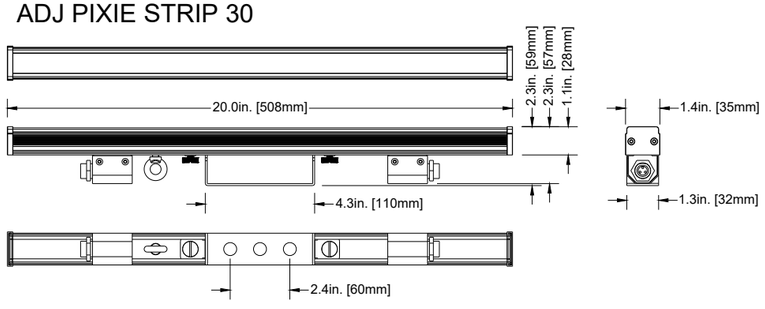

TITLE:				DATE:
ADJ PIXIE STRIP 30, 60, & 120				201001
SCALE:	TOL:	.XX(.X)	.XXX(.XX)	ANGLE:
NONE	±	-	-	-