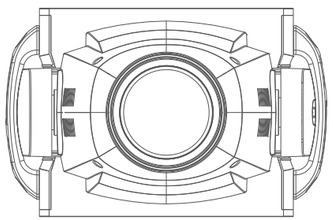

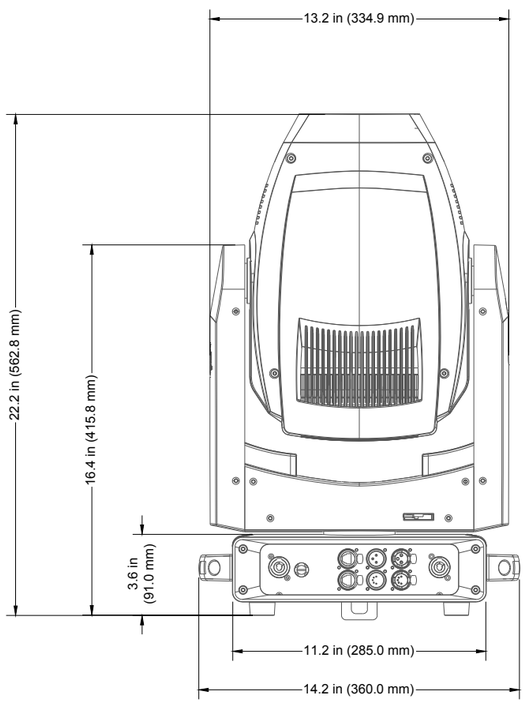

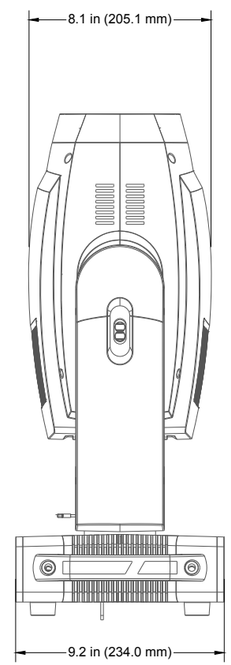

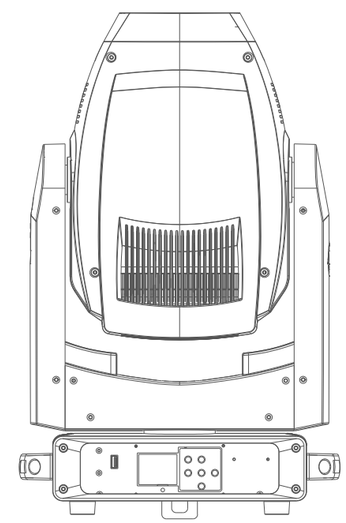

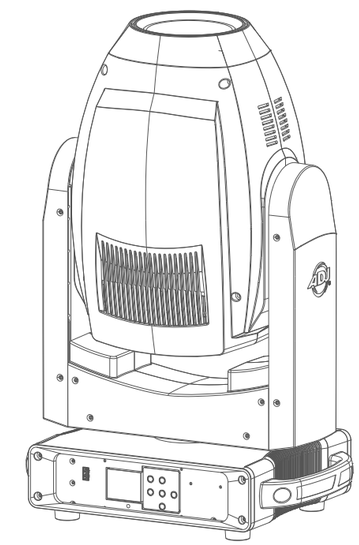

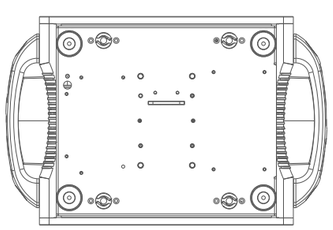

TITLE:	DATE:
ADJ FOCUS SPOT 6Z	18-NOV-2020

SCALE:	TOL:	.XX(.X)	.XXX(.XX)	ANGLE:
NONE	± 1mm	-	-	-