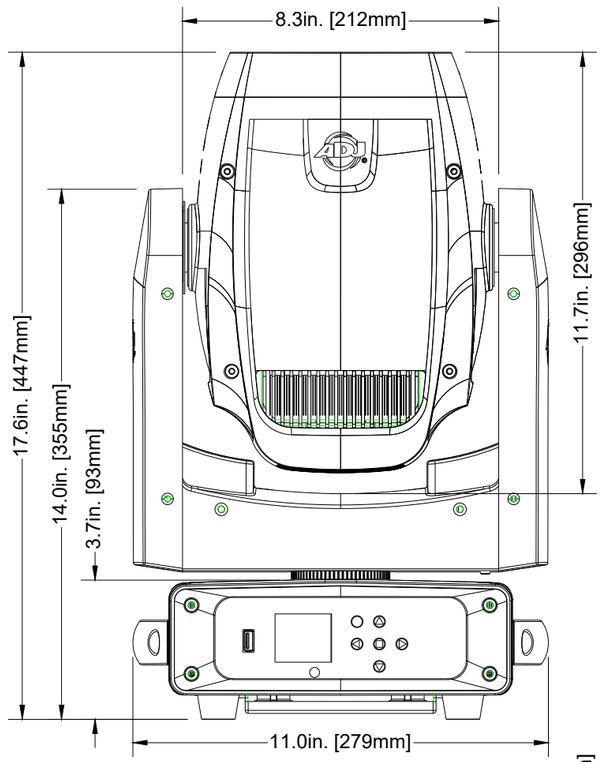

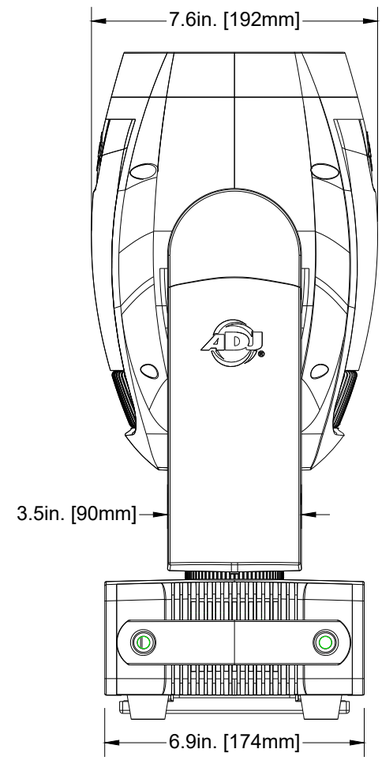

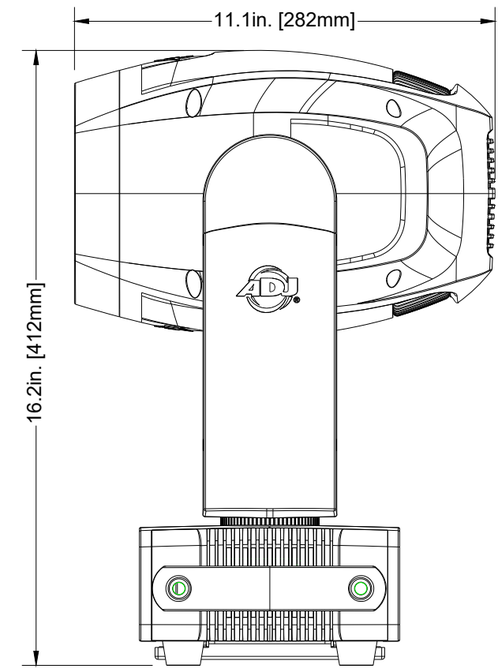

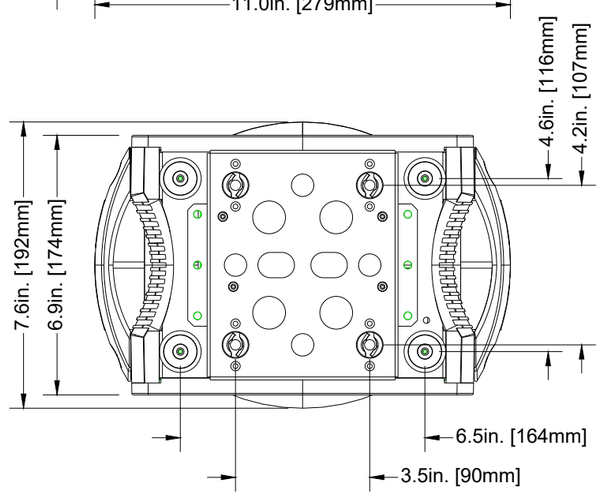

TITLE:				DATE:
ADJ FOCUS BEAM LED				210506
SCALE:	TOL:	.XX(.X)	.XXX(.XX)	ANGLE:
NONE	±	-	-	-